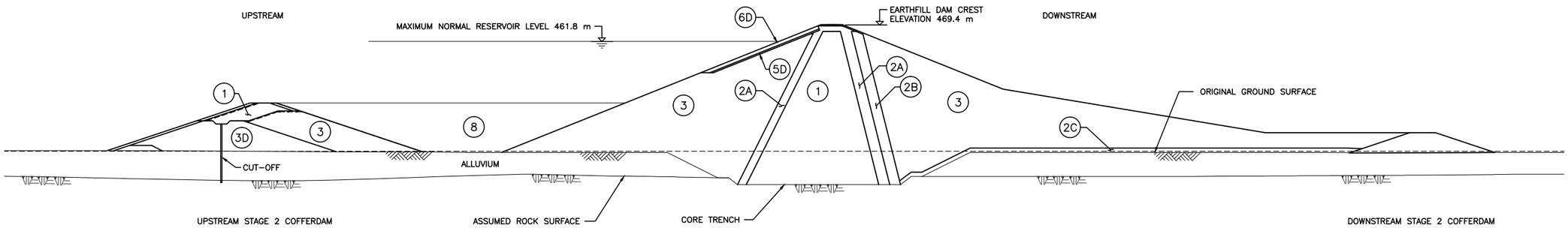

LEGEND

ZONE	DESCRIPTION
1	IMPERVIOUS CORE MATERIAL
2A	FINE FILTER
2B	COARSE FILTER
2C	DRAINAGE BLANKET
3	SHELL (AND GRANULAR MATERIAL)
3D	DUMPED GRANULAR MATERIAL
5D	RIPRAP BEDDING
6D	RIPRAP
8	RANDOM FILL

0 50 m
1:1000

SCHEMATIC ONLY

BC hydro

SITE C CLEAN ENERGY PROJECT

Figure 4.14
Cross-section of
earthfill dam

Date	Oct 10, 2012	DWG NO	1016-C14-06601	R 0

© BC Hydro 2012 - all rights reserved. This map is for information purposes only and accuracy is not guaranteed.

Construction of the Site C Clean Energy Project is subject to required regulatory approvals including environmental certification